TECHNICAL DATA

Three Phase Electric Motors - Aluminum Frame
UM2A 71M2-4
0.37 kW / 0.50 Cv
1400 RPM

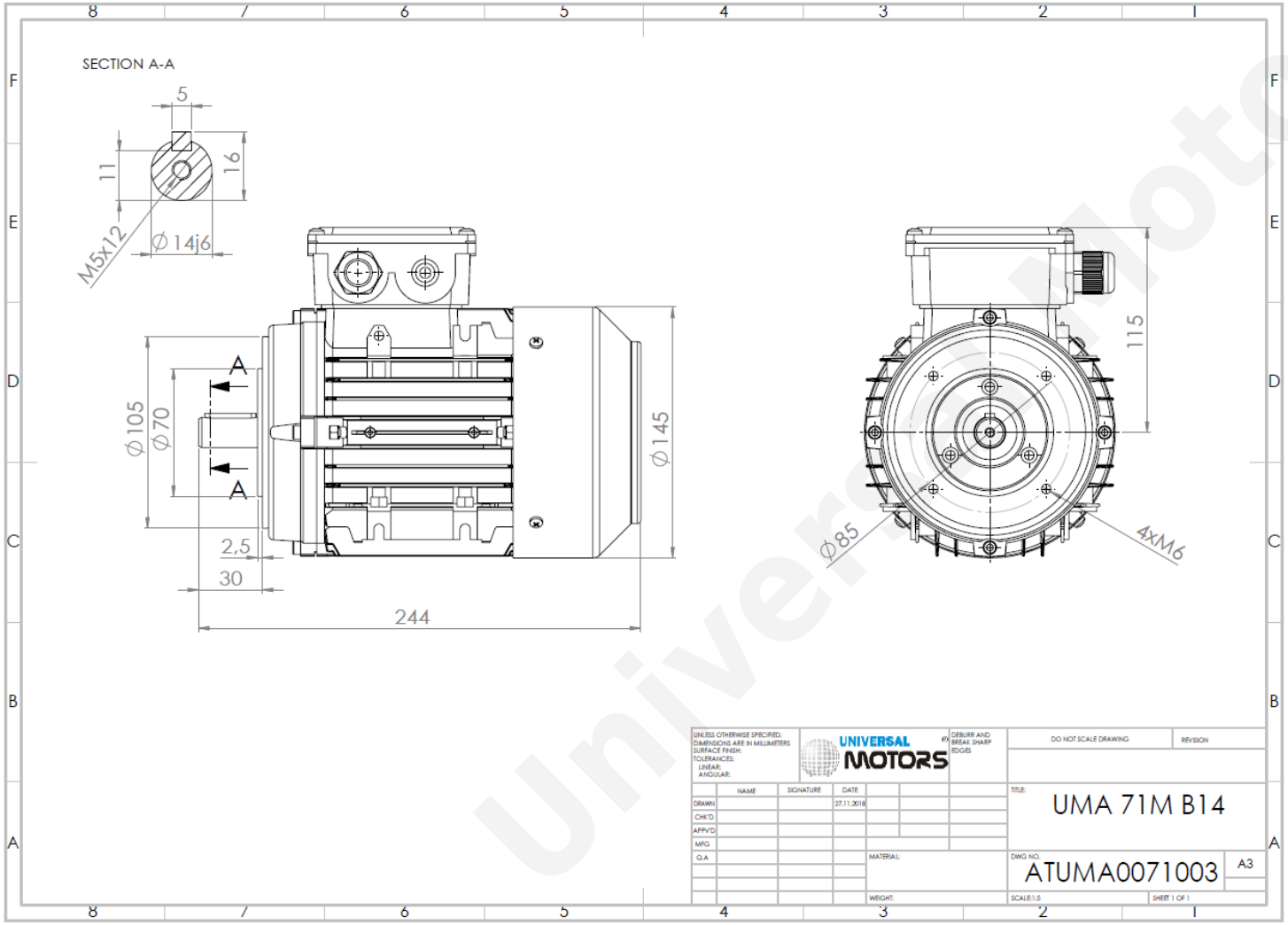

Motor type:	**UM2A 71M2-4**
Output:	**0.37 kW / 0.50 Cv**
Speed (min^{-1}):	**1400 RPM**
Frequency:	**50 Hz**
Voltage:	**400 V**
Current:	**1.01 A**
Power factor (Cos Ø):	**0.73**
Poles:	**4**
Insulation class:	**F**
Temperature rise Class:	**B**
Efficiency 50%:	**69.2 %**
Efficiency 75%:	**73.0 %**
Efficiency 100%:	**72.7 %**
Torque:	**2.55 N.m**
Tstarting/Tnominal:	**2.4**
Istarting/Inominal:	**4.7**
Tmaximum/Tnominal:	**2.5**
Noise:	**55 Db(A)**
Weight:	**6.3 Kg**
Brake AC:	**AC2**
Torque Brake DC:	**4 N.m**
Bearing DE:	**6202 2Z**
Bearing NDE:	**6202 2Z**
Torque Brake AC:	**15 N.m**
Brake DC:	**REB-05-06**

Regime - S1 **Altitude - 1000m** **Environment Temperature - 40ºC**

* References applied only in the UK

CONTACTS:

UNIVERSAL MOTORS
Rua de São Brás,745
4480-782 VILA DO CONDE
Tel: +351 252 299 080
Fax: +351 252 299 089
Mail: geral@universalmotors.pt

Universal Motors